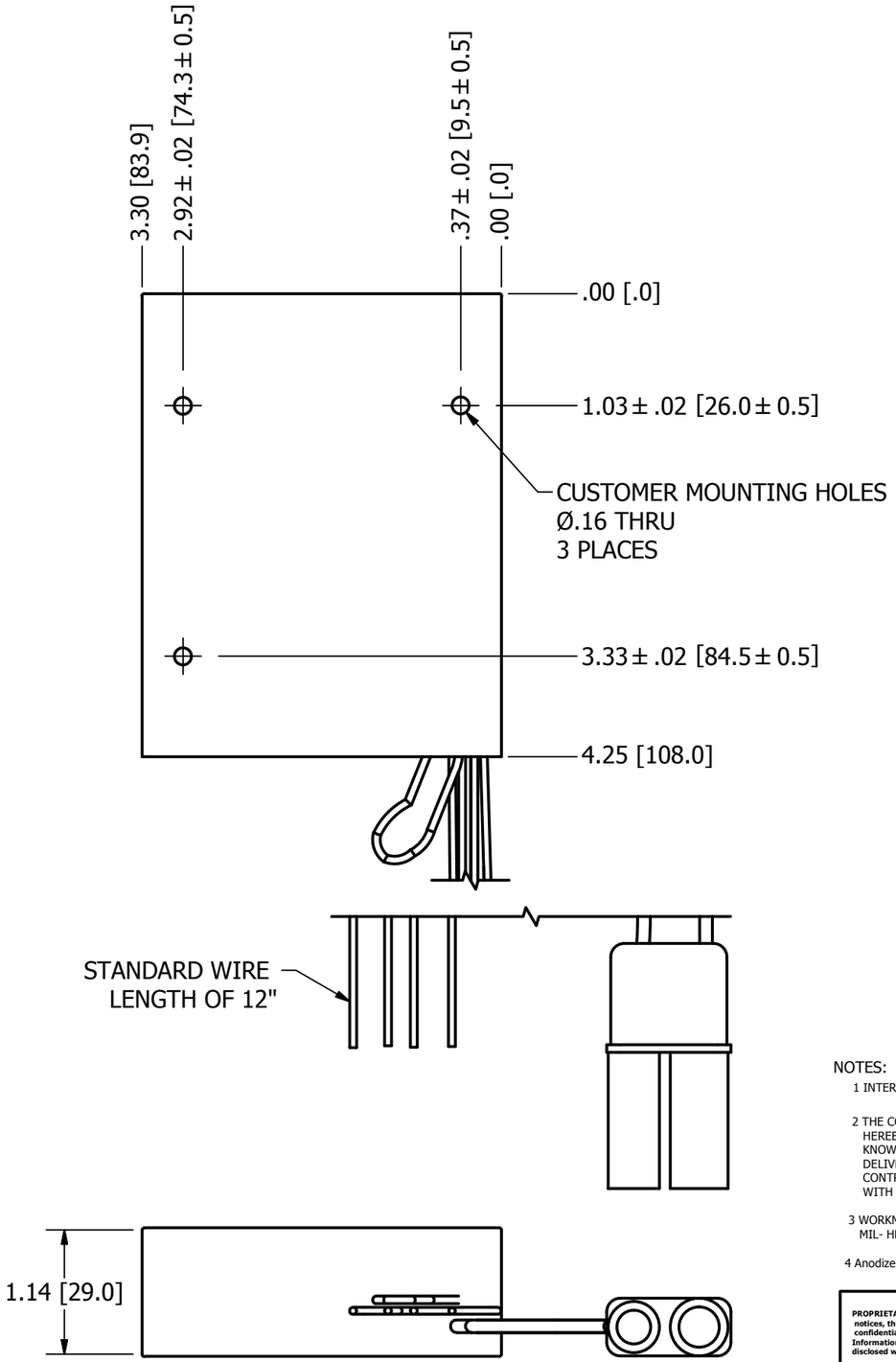

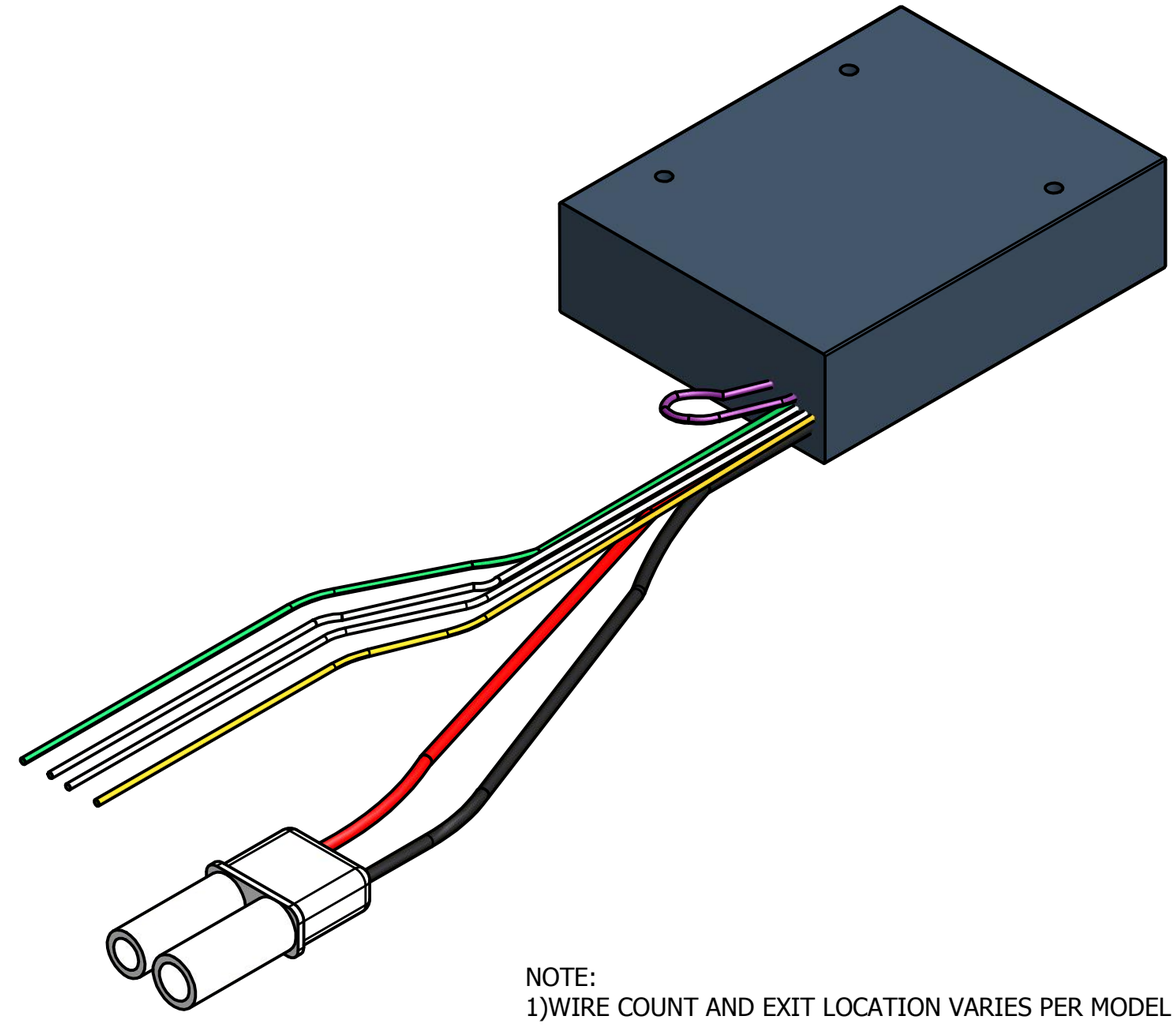

NOTE:
1)WIRE COUNT AND EXIT LOCATION VARIES PER MODEL
2)HIGH VOLTAGE CONNECTOR OPTIONAL

NOTES:

1 INTERPRET DRAWING PER 40M114

2 THE CONTRACTOR. POWER TECHNOLOGY INC. HEREBY CERTIFIES THAT. TO THE BEST OF ITS KNOWLEDGE AND BELIEF,THE TECHNICAL DATA DELIVERED HEREWITH UNDER THE SUBJECT CONTRACT IS COMPLETE, ACCURATE AND COMPLIES WITH ALL REQUIREMENTS OF THE CONTRACT.

3 WORKMANSHIP SHALL BE IN ACCORDANCE WITH MIL- HDBK - 454. GUIDELINE 9.

4 Anodize Per mil-A-8625 Type II Class II

PROPRIETARY INFORMATION NOTICE: Despite any other copyright notices, this document and information disclosed herein contains confidential, proprietary designs owned by POWER TECHNOLOGY. Information contained herein shall NOT be reproduced, used or disclosed without the written authorization of POWER TECHNOLOGY.

MATERIAL: PLASTIC

FINISH: BLACK

DIMENSIONAL TOLERANCES AND SYMBOLS IN ACCORDANCE WITH ANSI Y14.5M-1982

.xx±.01 ∠±2°

.xxx±.005 FRACTIONS+1/64

SCRATCH & DIG >63

Power Technology Incorporated
Putting the "custom" back in "customer"

Power Technology, Inc.
Address correspondence to:
P.O. Box 191117
Little Rock, Ar 72219-1117
(501) 407-0712

Plant Location:
16302 Alexander Road
Alexander, Ar. 72002
(501) 407-0036 Fax

DRAWN	DATE	TITLE
SM	4/9/26	**HENE POWER SUPPLY: L92/SL92**
CHECKED		
PROJ.ENGR		
ENGR	APPROVED	SC

NO.	RV	SZ	Sheet of
0-0092-0C02	A	B	1 1